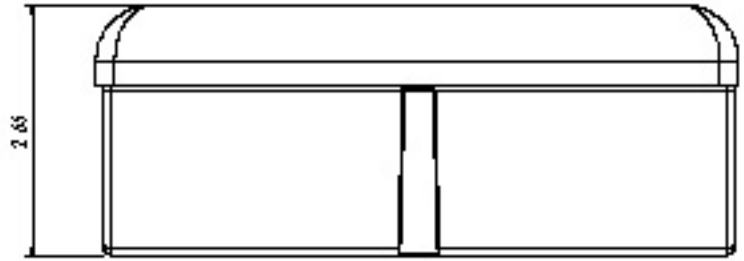

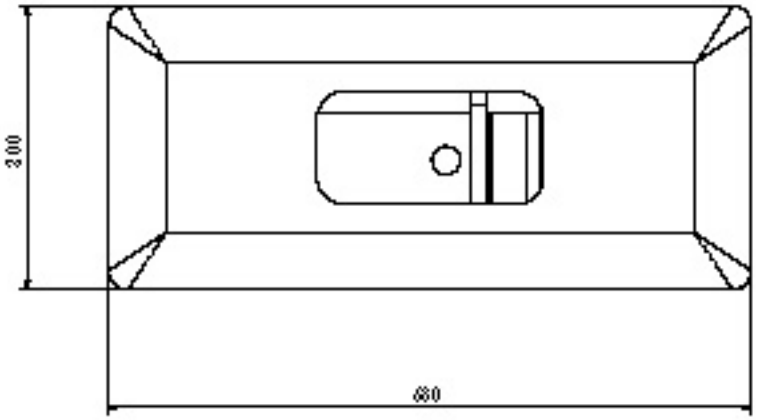

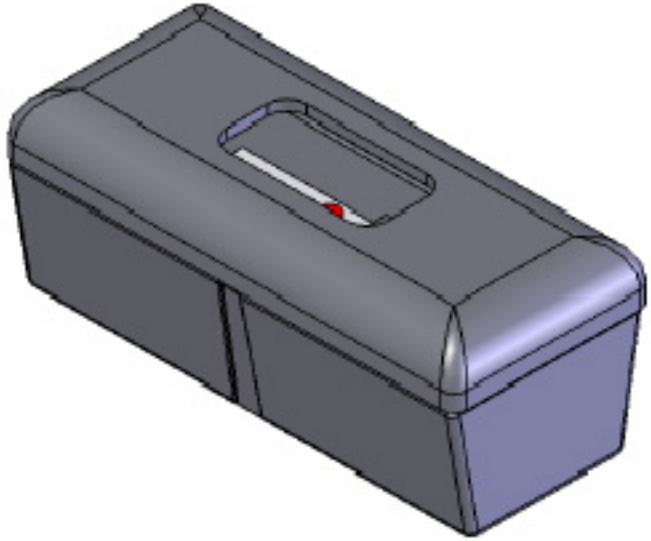

MODEL	1	DIMENSIONS ARE IN mm		NAME	DATE
		TOLERANCES:	DRAWN	P.Vallinski	22-10-2004
		FRACTIONAL ±	CHECKED		
		ANGULAR: MACH ± BEND ±	ENG APPR		
		TWO PLACE DECIMAL ±	MFG APPR		
		THREE PLACE DECIMAL ±	Q A		
		MATERIAL --	COMMENTS:		
		FINISH --	Plast box with Hpi agregat		
Order No.	Qty				
APPLICATION		DO NOT SCALE DRAWING			

HABRIAL MANUTENTION

SIZE	DWG. NO	REV
A		
SCALE:1:20	WEIGHT:	SHEET 1 OF 1

PROPRIETARY AND CONFIDENTIAL
THIS INFORMATION CONTAINED IN THIS DRAWING IS THE SOLE PROPERTY OF "SOLID & Company International A/S". ANY REPRODUCTION IN PART OR AS A WHOLE WITHOUT THE WRITTEN PERMISSION OF "SOLID & Company International A/S" IS PROHIBITED.